lockers.com
1-800-LOCKERS

Visit us at: www.lockers.com

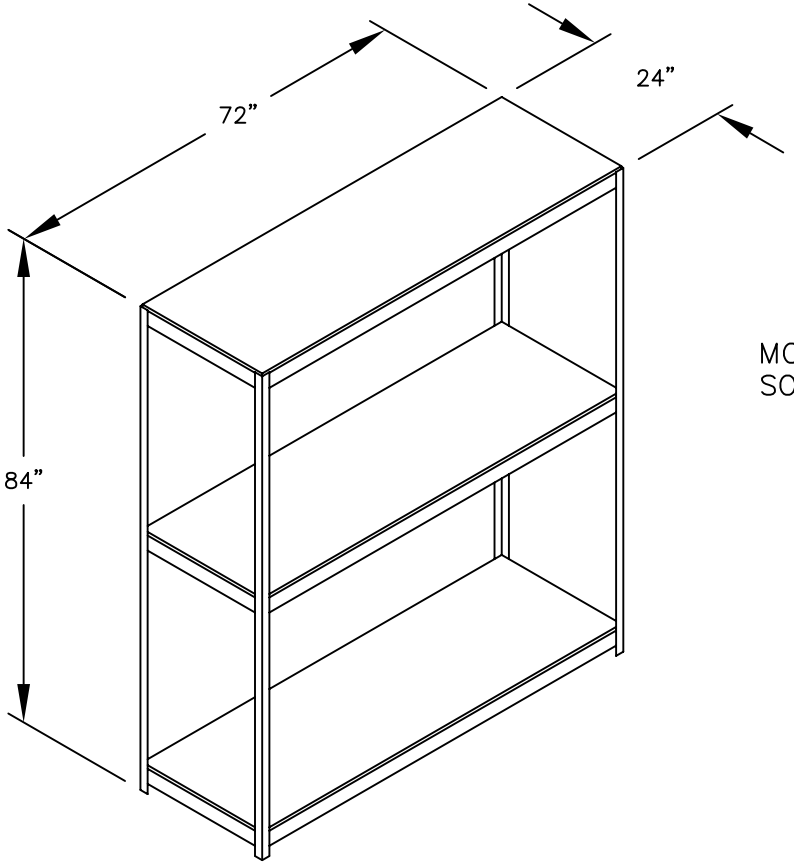

MODEL #9762
SOLID SHELVING

MODEL #9762

SOLID SHELVING

DRAWN: 04/10

Established in 1936, Salsbury Industries is the industry leader in manufacturing and distributing quality lockers and storage solutions.

SALSBURY INDUSTRIES
People Committed to Quality Since 1936®

1010 E. 62ND STREET
LOS ANGELES, CA 90001
PHONE: (800) 562-5377
FAX: (800) 562-5399
email: engineering@lockers.com